Ritchie Specs
JLG 3246ES Scissor Lift

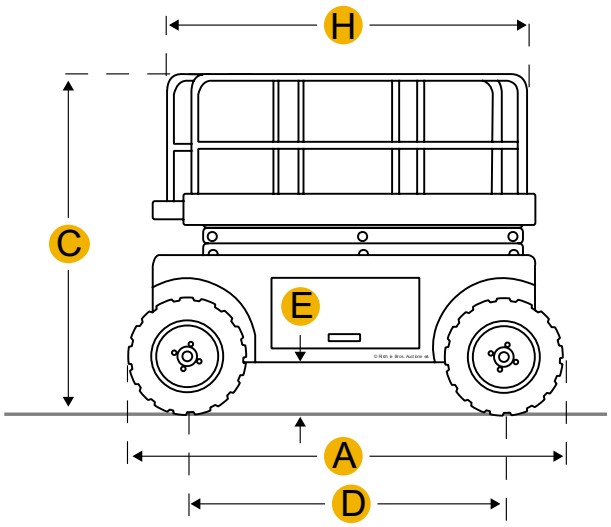

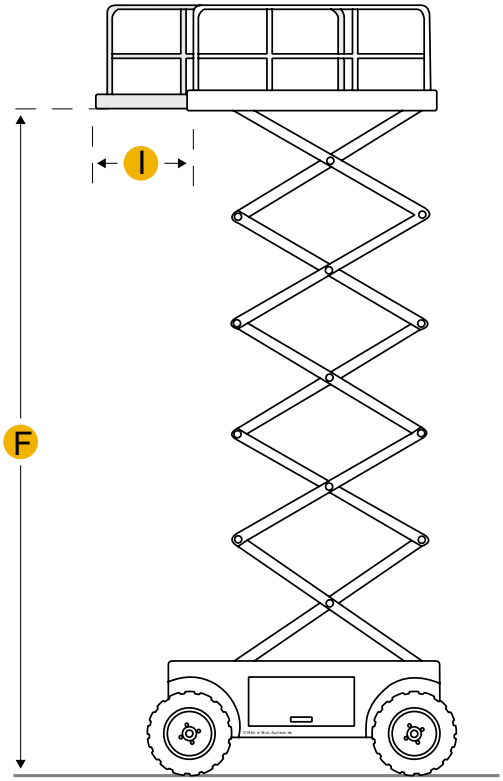

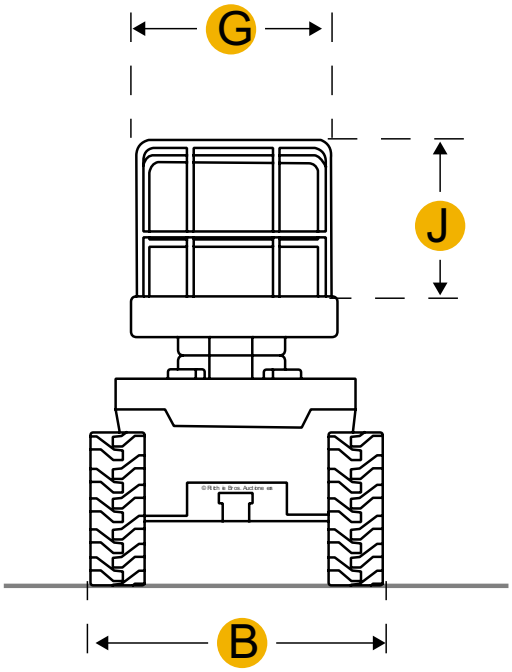

Dimensions

Dimensions	
A **Overall Length**	8.21 in
D **Wheelbase**	6.86 ft in
B **Overall Width**	3.84 ft in
E **Ground Clearance**	5 in
Height W/O Rails	6.47 ft in
Turning Radius	7.91 ft in
Platform Dimension B	3.8 ft in
Platform Dimension A	8.31 ft in
Platform	
F **Max Platform Height**	31.76 ft in
I **Deck Extension**	35.44 in
J **Height Of Rails**	3.61 ft in
Platform Capacity - Restricted	1000 lb
Platform Capacity - Unrestricted	700 lb
Max Platform Weight Capacity	1000.9 lb
Lower Time	50 sec
Platform Capacity - Extension	250 lb
Platform Inner Width	44.1 in
Platform Railing Height	31.76 ft in
Lift Time	50 sec
Platform Inner Length	98.43 in

Specifications

Engine	
Maximum Ground Bearing Pressure	87 psi
System Voltage	24 V
Number Of Batteries	4
Battery Amp Hours	4 x 6V, 220 amp-hours
Charger Amps	20 amps
Operational	
Operating Weight	4779.7 lb
Hydraulic System Fluid Capacity	1.7 gal
Max Speed	2.5 mph
Tire Size	16x5 in
Tire Fill/Type	Solid, Non-marking
Hydraulic Pump Type	Fixed Displacement Gear
Performance	
Drive Speed - Platform Elevated	0.5 mph
Drive Speed - Platform Lowered	2.5 mph
Maximum Drive Height	31.8 ft in
Maximum Lift Height	31.8 ft in
Gradeability	25 %
Brakes	
Brakes Type	Electric, Friction

Compare similar models

Manufacturer/Model	*Max Platform Weight Capacity*	*Operating Weight*
JLG 2632ES	--	4635 lb
JLG 3246ES	1000.9 lb	4779.7 lb
Snorkel S2646	1000.9 lb	5147.8 lb